EUROfase® INC.

TEL 905.695.2055 **toll free** 1.800.660.5391
FAX 905.695.2056 **toll free** 1.800.660.5390

33 West Beaver Creek Road Richmond Hill, Ontario Canada L4B 1L8

INNTRA, 14" INTEGRATED LED OUTDOOR WALL SCONCE



PRODUCT DETAILS

No.	:	49013-023
Product Color	:	DAMASCUS BLACK
Product Material	:	STEEL
Shade / Accent Colour	:	SILVER
Length	:	6"
Width	:	3.5"
Height	:	14"
Weight	:	3.7LBS

LIGHT SOURCE DETAILS

Number of Bulbs	:	1
Light Source	:	LED
Light Source Type	:	INTEGRATED LED
Input Voltage	:	120V
Bulb Voltage	:	120V
Wattage	:	1 X 10W
Total Wattage	:	10W
Delivered Lumens	:	295LM
Kelvin	:	3000K
CRI	:	90
Bulb Included	:	YES
Dimmable	:	YES

TECHNICAL DETAILS

Hanging Support Type	:	J-BOX
Beam Angle	:	360

OPTIONS AVAILABLE

ITEM NO.	FINISH	SHADE
49013-016	**DAMASCUS BRASS**	
49013-023	**DAMASCUS BLACK**	

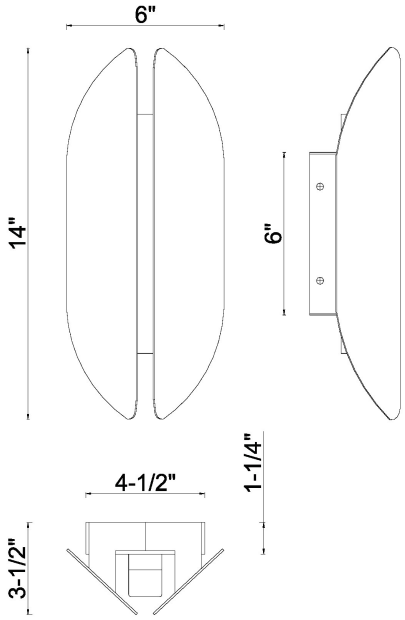

PROJECT INFORMATION

Job Name: Date: Type:

Comments: