EUROfase INC.

TEL 905.695.2055 **toll free** 1.800.660.5391
FAX 905.695.2056 **toll free** 1.800.660.5390

33 West Beaver Creek Road Richmond Hill, Ontario Canada L4B 1L8

OLETTE, 2-TIERS LIGHT 42" INTEGRATED LED GRAND CHANDELIER

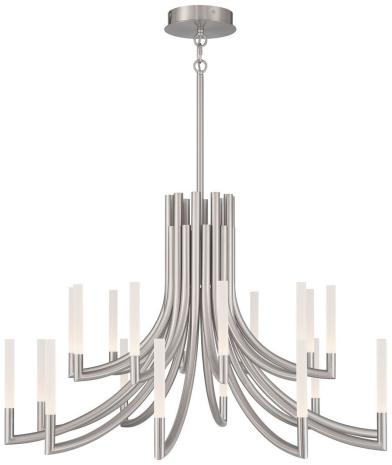

PRODUCT DETAILS

No.	:	49012-026
Product Color	:	BRUSHED NICKEL
Product Material	:	STEEL
Shade / Accent Colour	:	ACRYLIC
Shade / Accent Material	:	ACRYLIC
Diameter	:	42"
Height	:	26.5"
Weight	:	47.8LBS

LIGHT SOURCE DETAILS

Number of Bulbs	:	20
Light Source	:	LED
Light Source Type	:	INTEGRATED LED
Input Voltage	:	120V
Bulb Voltage	:	36V
Wattage	:	20 X 4W
Total Wattage	:	80W
Delivered Lumens	:	3873LM
Kelvin	:	3500K
CRI	:	90
Bulb Included	:	YES
Dimmable	:	YES

TECHNICAL DETAILS

Hanging Support Type	:	ROD
Approval	:	
Beam Angle	:	360

OPTIONS AVAILABLE

ITEM NO.	FINISH	SHADE
49012-019	**GOLD**	
49012-026	**BRUSHED NICKEL**	
49012-033	**MATTE BLACK**	

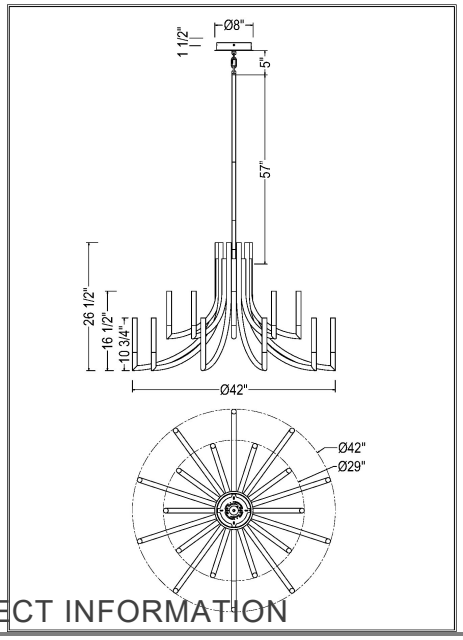

PROJECT INFORMATION

Job Name: Date: Type:

Comments: