**TEL** 905.695.2055 **toll free** 1.800.660.5391
**FAX** 905.695.2056 **toll free** 1.800.660.5390
33 West Beaver Creek Road Richmond Hill, Ontario Canada L4B 1L8

# COBURG, 33IN INTEGRATED LED CHANDELIER

## PRODUCT DETAILS

| | | |
|---|---|---|
| No. | : | 37345-025 |
| Product Color | : | ANODIZED BLACK |
| Product Material | : | METAL |
| Shade / Accent Colour | : | WHITE |
| Shade / Accent Material | : | ACRYLIC |
| Length | : | 32.75" |
| Width | : | 14" |
| Height | : | 23" |
| Overall Height | : | 96.75" |
| Weight | : | 16.7LBS |

## LIGHT SOURCE DETAILS

| | | |
|---|---|---|
| Number of Bulbs | : | 1 |
| Light Source | : | LED |
| Light Source Type | : | INTEGRATED LED |
| Input Voltage | : | 120V |
| Bulb Voltage | : | 120V |
| Socket Type | : | INTEGRATED |
| Wattage | : | 1 X 93W |
| Total Wattage | : | 93W |
| Delivered Lumens | : | 1950LM |
| Kelvin | : | 3000K |
| CRI | : | 90 |
| Bulb Included | : | YES |
| Dimmable | : | YES |

## OPTIONS AVAILABLE

| ITEM NO. | FINISH | SHADE |
|---|---|---|
| 37345-013 | GOLD | |
| 37345-025 | ANODIZED BLACK | |
| 37345-036 | ANODIZED SILVER | |

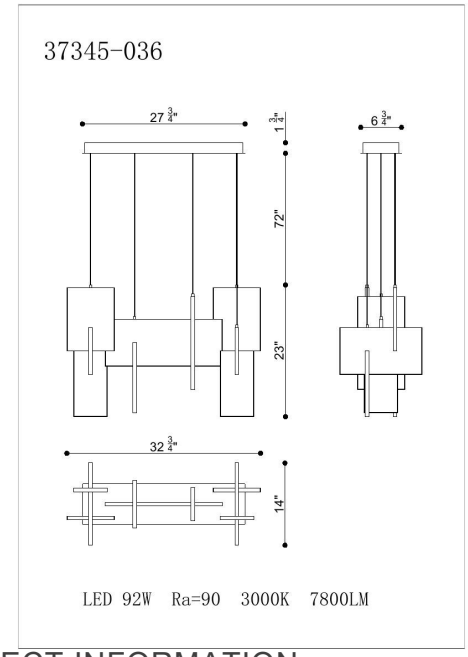


## TECHNICAL DETAILS

| | | |
|---|---|---|
| Hanging Support Type | : | AIRCRAFT CABLE |
| Canopy / Backplate Length | : | 27.75" |
| Canopy / Backplate Height | : | 1.5" |
| Canopy / Backplate Width | : | 1.75" |
| IP Rating | : | IP22 |
| Location | : | DRY |
| Approval | : | |
| Beam Angle | : | 360 |

## PROJECT INFORMATION

Job Name: _____ Date: _____ Type: _____

Comments: _____