EUROfase INC.

TEL 905.695.2055 **toll free** 1.800.660.5391
FAX 905.695.2056 **toll free** 1.800.660.5390

33 West Beaver Creek Road Richmond Hill, Ontario Canada L4B 1L8

BLOOMFIELD, 22-LIGHT 47IN INTEGRATED LED CHANDELIER



OPTIONS AVAILABLE

ITEM NO.	FINISH	SHADE
37096-014	MATTE GOLD	
37096-025	MATTE BLACK	

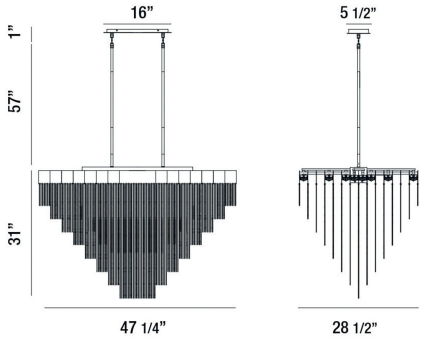

PRODUCT DETAILS

No.	:	37096-025
Product Color	:	MATTE BLACK
Product Material	:	METAL
Shade / Accent Colour	:	BLACK
Shade / Accent Material	:	ALUMINUM
Length	:	47.25"
Width	:	28.5"
Height	:	31"
Overall Height	:	89"
Weight	:	50.6LBS

LIGHT SOURCE DETAILS

Number of Bulbs	:	22
Light Source	:	LED
Light Source Type	:	INTEGRATED LED
Input Voltage	:	120V
Bulb Voltage	:	120V
Socket Type	:	INTEGRATED
Wattage	:	22 X 4.5W
Total Wattage	:	99W
Delivered Lumens	:	2600LM
Kelvin	:	3000K
CRI	:	90
Bulb Included	:	YES
Dimmable	:	YES

TECHNICAL DETAILS

Hanging Support Type	:	ROD
Rods Included	:	3"+6"+12"+18"+18"
Canopy / Backplate Length	:	16"
Canopy / Backplate Height	:	1"
Canopy / Backplate Width	:	5.5"
IP Rating	:	IP22
Location	:	DRY
Approval	:	
Beam Angle	:	360

PROJECT INFORMATION

Job Name: Date: Type:

Comments: